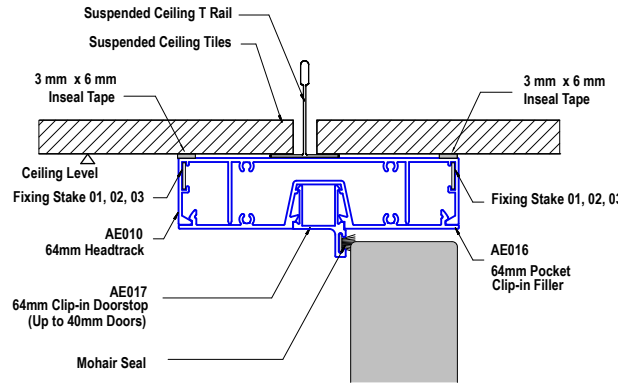

40mm Selected Door

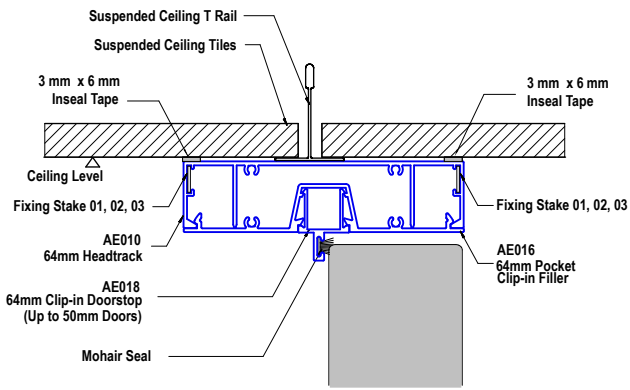

50mm Selected Door